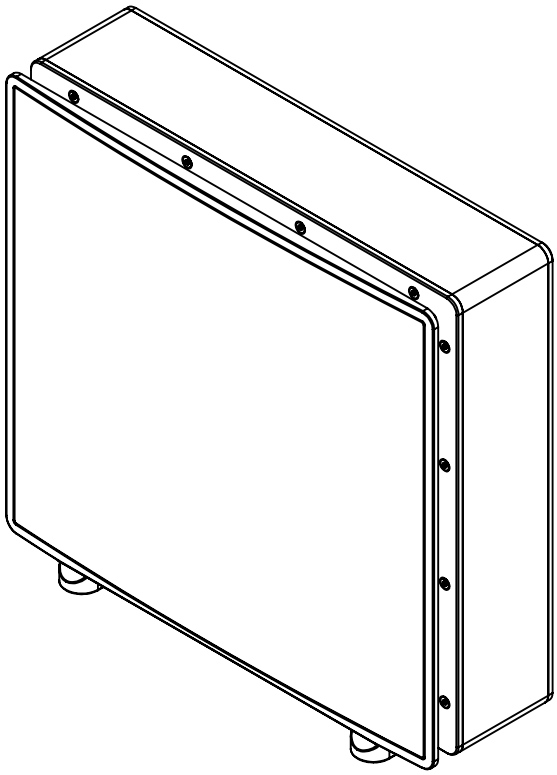

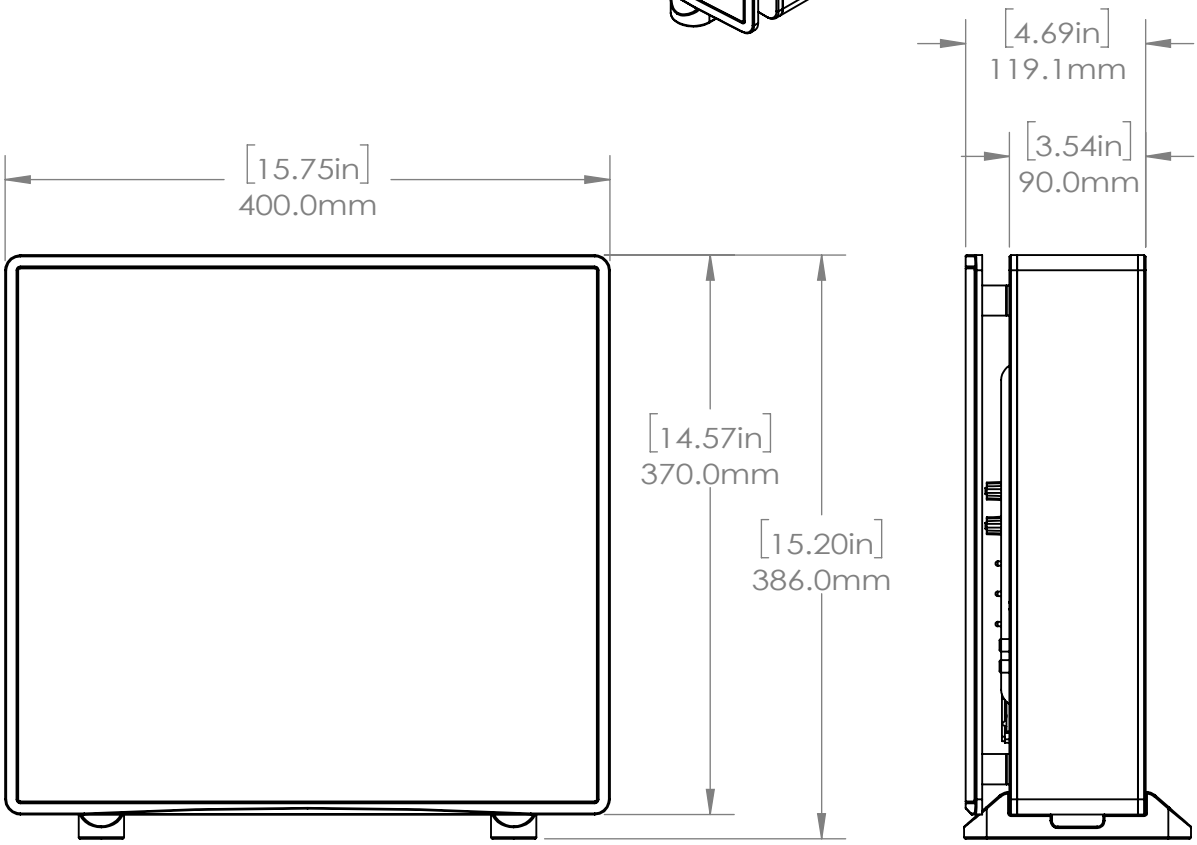

ORIGIN ACOUSTICS®

SUBS10 WITH GRILLE 07-06-2022

SCALE:1:5

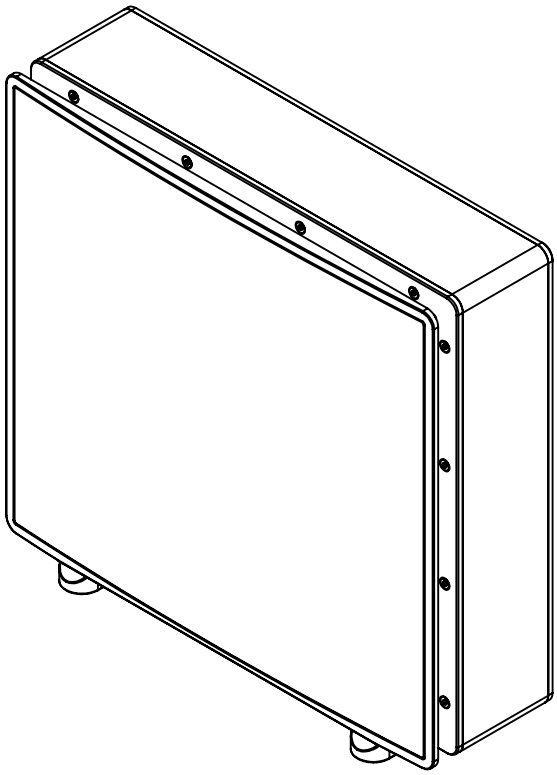

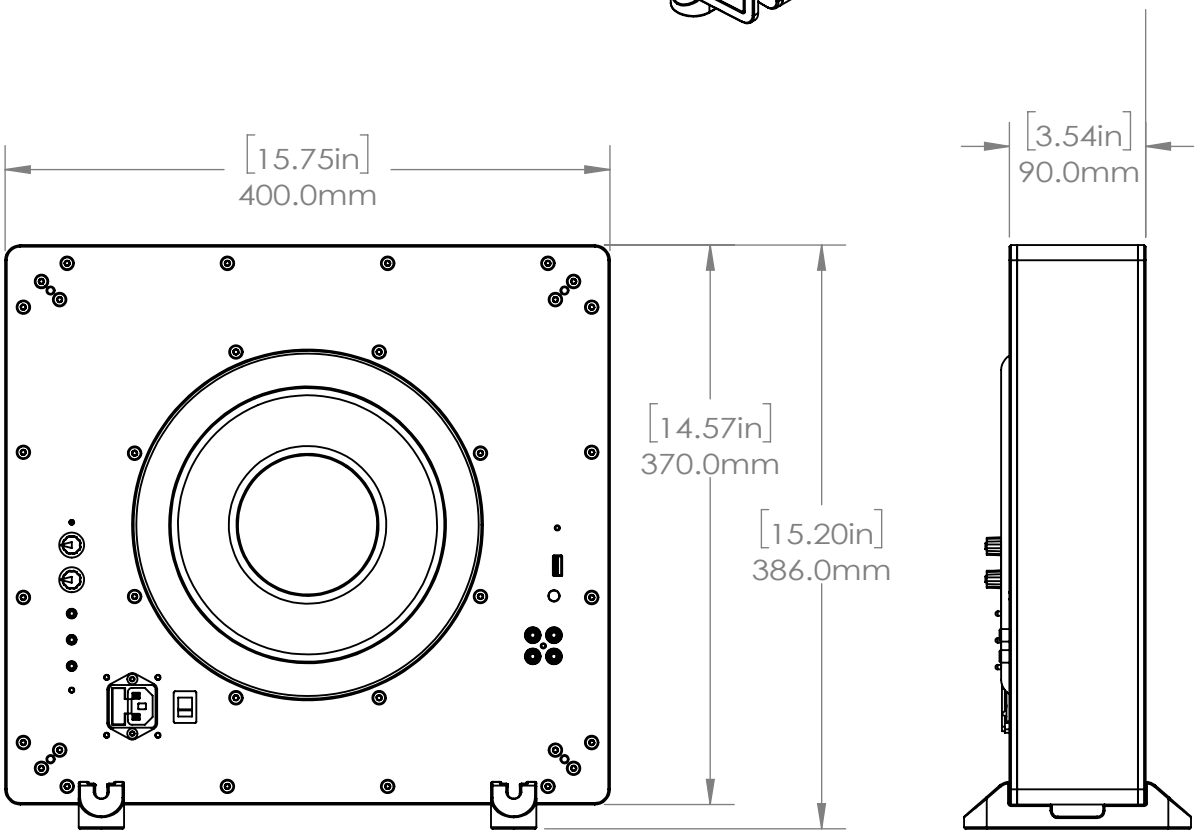

ORIGIN ACOUSTICS®

SUBS10 WITHOUT GRILL 07-06-2022

SCALE:1:5

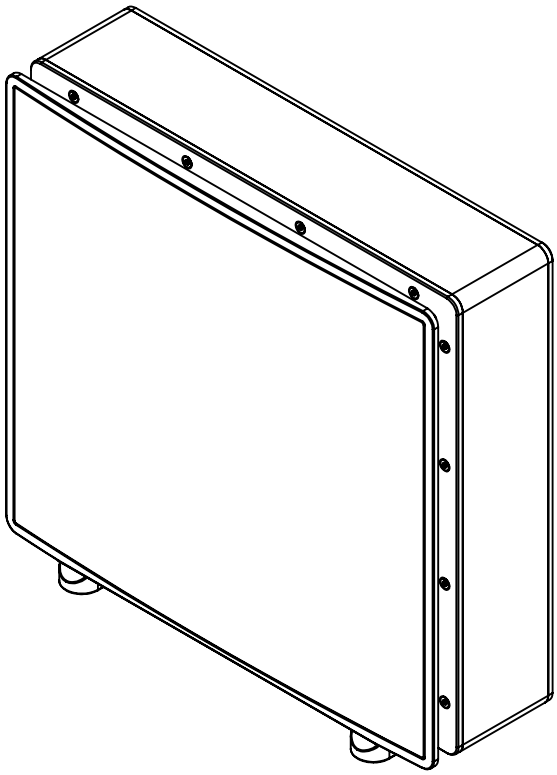

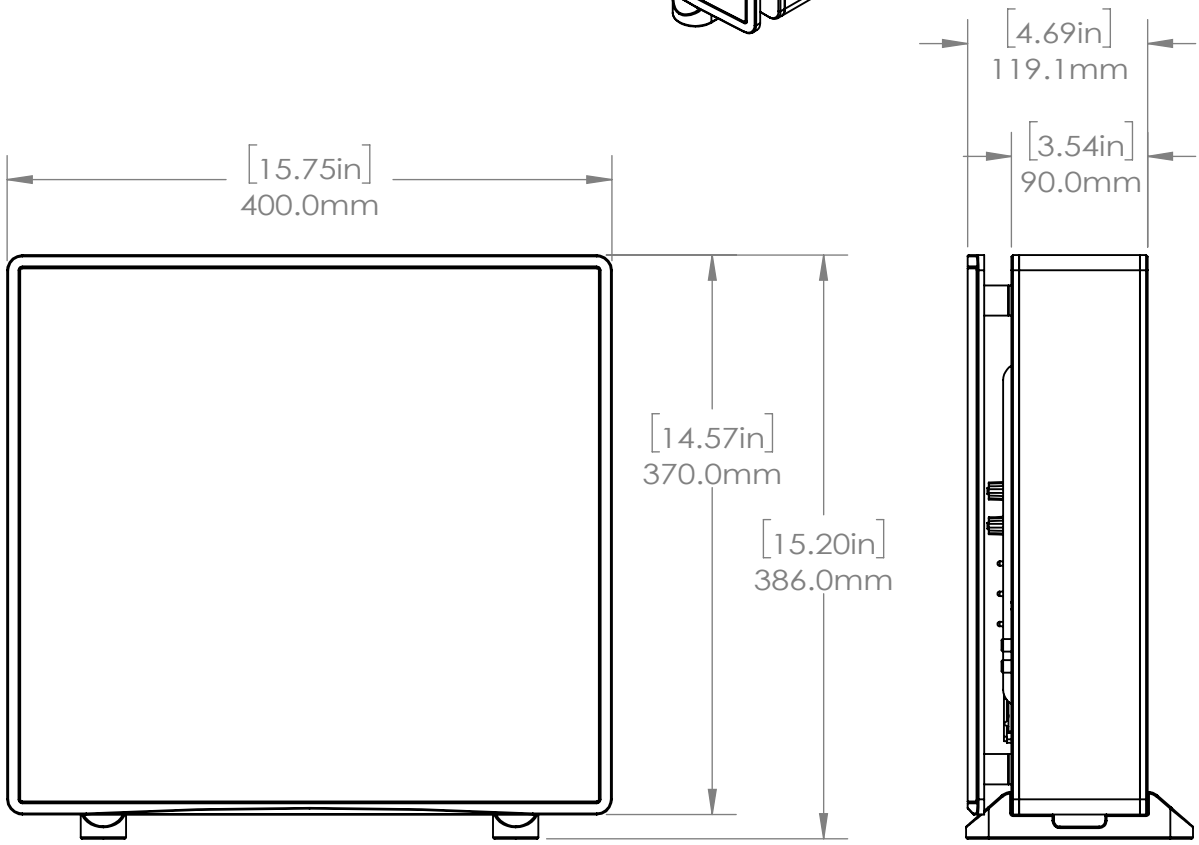

ORIGIN ACOUSTICS®

SUBS10 WITHOUT GRILL 07-06-2022

SCALE:1:5